RoHS2.0 Compliant

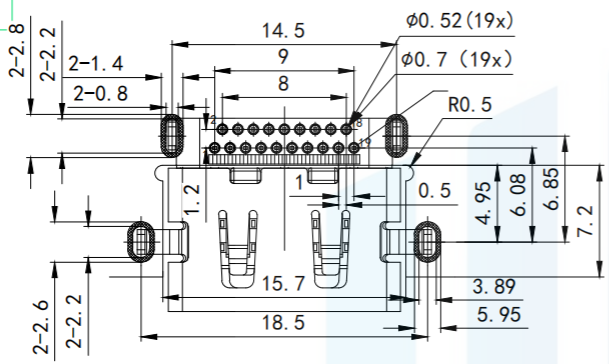

RECOMMENDED PCB LAYOUT (TOP VIEW)
GENERAL TOLERANCES: ±0.05

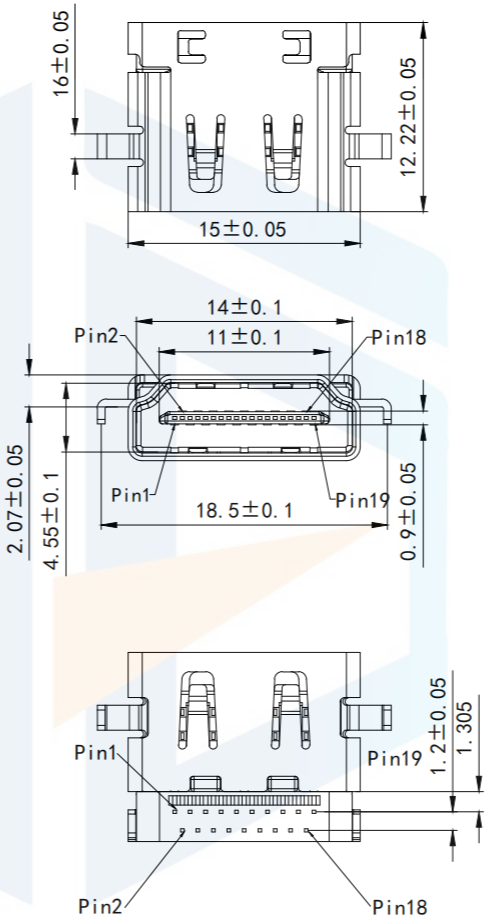

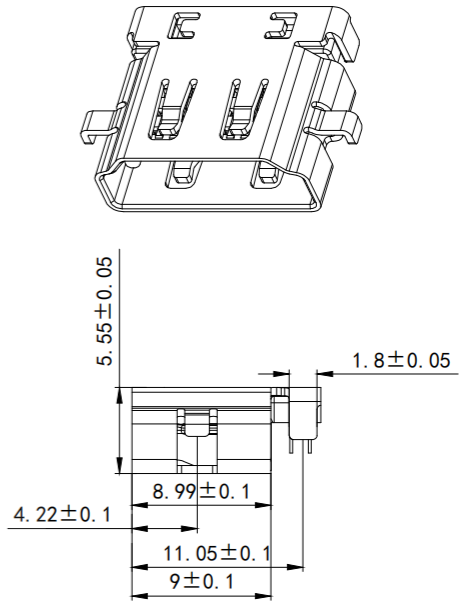

SPECIFICATION

1. Electrical characteristics
   Contact Current Rating:0.5 A
   Dielectric Withstanding Voltange:300V AC
   Insulation Resistance:a. Mate 100MΩ MIN at 500V/DC
   b. Unmate 10MΩ MIN at 150V/DC
   Contact Resistance:30mΩ MAX
   Temperature Range:-20° C to +85° C
2. Mechanical
   Mating Face:44.1N MAX
   Unmatin Face:9.8N MIN;39.2N MAX
   Durability:5000 Cycles
3. material:
   HOUSING:THERMOPLASTICS HIGH TEMP LCP+GLASS FIBER WHITE COLOR,UL94V-0
   CONTACT:Copper Alloy ,T=0.20MM
   SHELL:Copper Alloy(SPCC) ,T=0.50MM
4. PLATING:
   CONTACT:1～30u"GOLD/TIN PLATING ON CONTACT AREA
   100u"MIN,TIN PLATING ON SOLDERTAILS
   50u"MIN,NICKEL UNDERPLATING OVER ALL
   SHELL:80u", NICKEL UNDERPLATING OVER ALL
5. "*"Key control size

TOLERANCE	
X.XXX	±0.05
X.XX	±0.15
X.X	±0.20
X.	±0.30
ANGLE	±5.0°

PROTECTON

东莞市恒祺电子科技有限公司
Dongguan Hengqi Electronic Technology Co., Ltd

https://www.hq-dz.com phone:15812872448

TITLE: HDMI 19P反向沉板2.07mm 外壳DIP

PART NO:HDMI-DF207

DRAWING NO:15*12.22*4.55

DRAWN:		DATE:	18-10-08	UNIT: mm
CHECKED:		DATE:	18-10-08	SCALE: FULL
APPROVED:		DATE:	18-10-08	SIZE: A4