RoHS2.0
Compliant

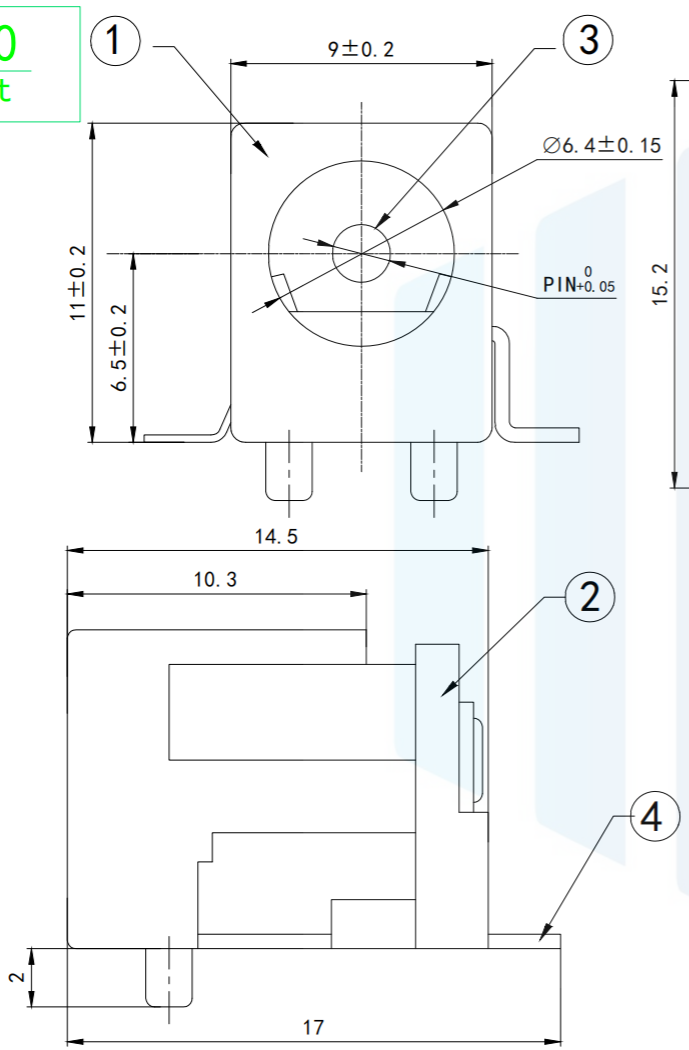

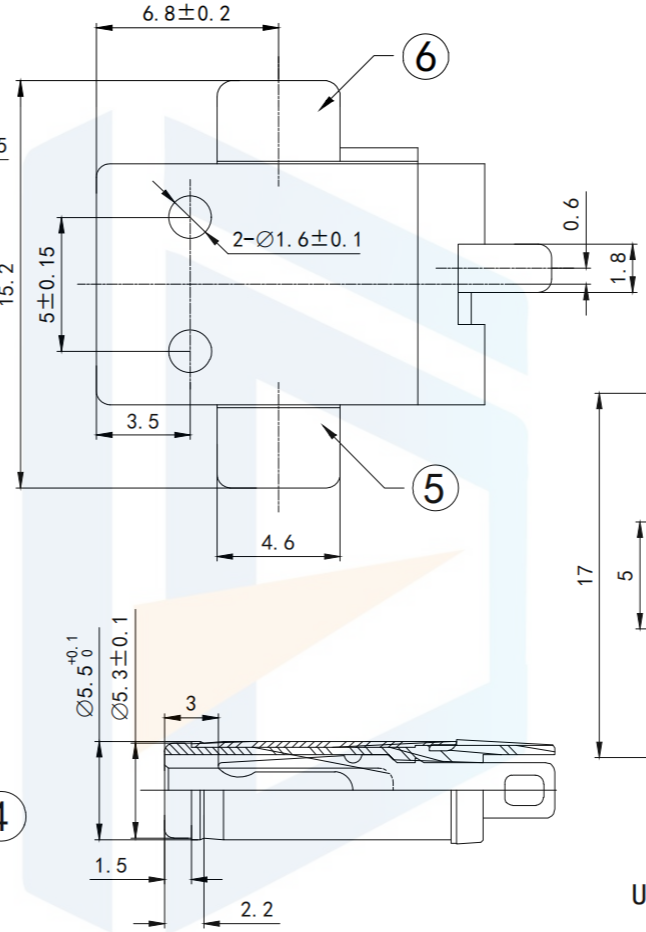

DC MATE PLUG

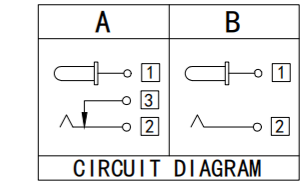

MODEL NO.	H	J
CENTER PIN	Ø2.0	Ø2.5

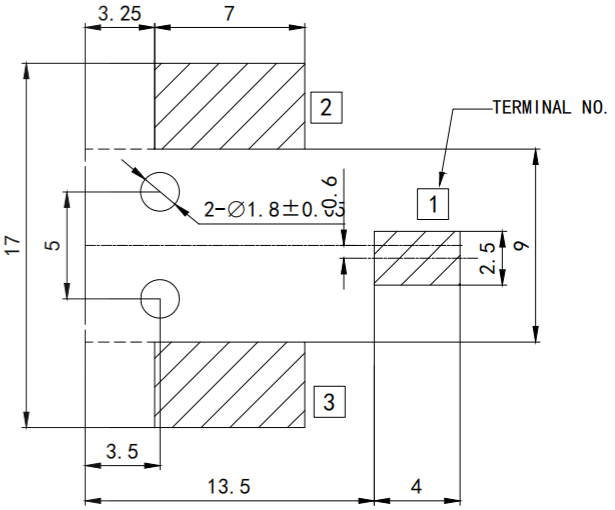

RECOMMENDED P.C.B. LAYOUT
UNSPECIFIED TOLERANCE:±0.05
(COPPER-TOP VIEW)

Technical requirements
1. Rated load: DC 30V 0.5A
2. Contact resistance: ≤0.03Ω
After test:≤50mΩ
3. Insulation resistance: ≥100Ω DC250V
After test:≥50mΩ
4. Withstand voltage:500VAC
5. Insertion force: 3-30N
6. Mechanical life: 5000 times
7. Operation temperature range:-20℃～70℃

TOLERANCE	
X.XXX	±0.05
X.XX	±0.15
X.X	±0.20
X.	±0.30
ANGLE	±5.0°

PROTECTON

东莞市恒祺电子科技有限公司
Dongguan Hengqi Electronic Technology Co., Ltd
https://www.hq-dz.com phone:15812872448

TITLE: DC电源插座

PART NO:DC-088
DRAWING NO:14.5*9*11

DRAWN:		DATE:	18-10-08	UNIT: mm
CHECKED:		DATE:	18-10-08	SCALE: FULL
APPROVED:		DATE:	18-10-08	SIZE: A4